One Qubit Anomaly

Malcolm, Alan, Onur
Flint Center Collective

T and S gates on their own limit you.

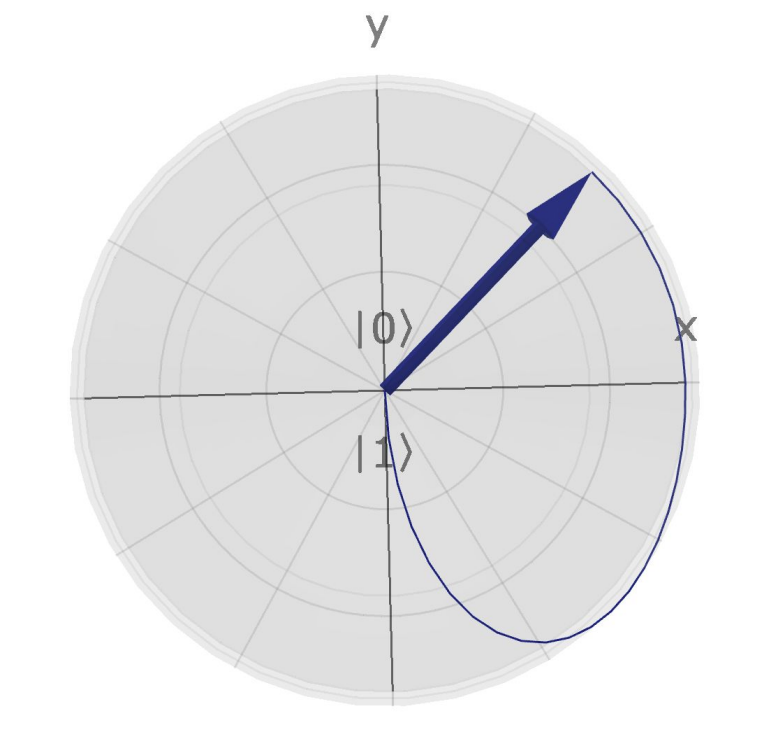

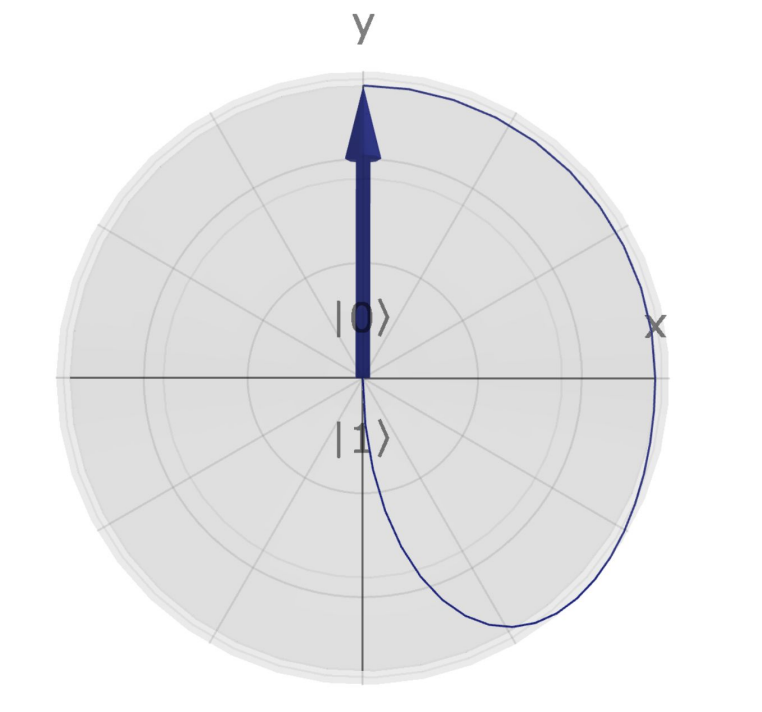

HTH - Where it gets interesting.

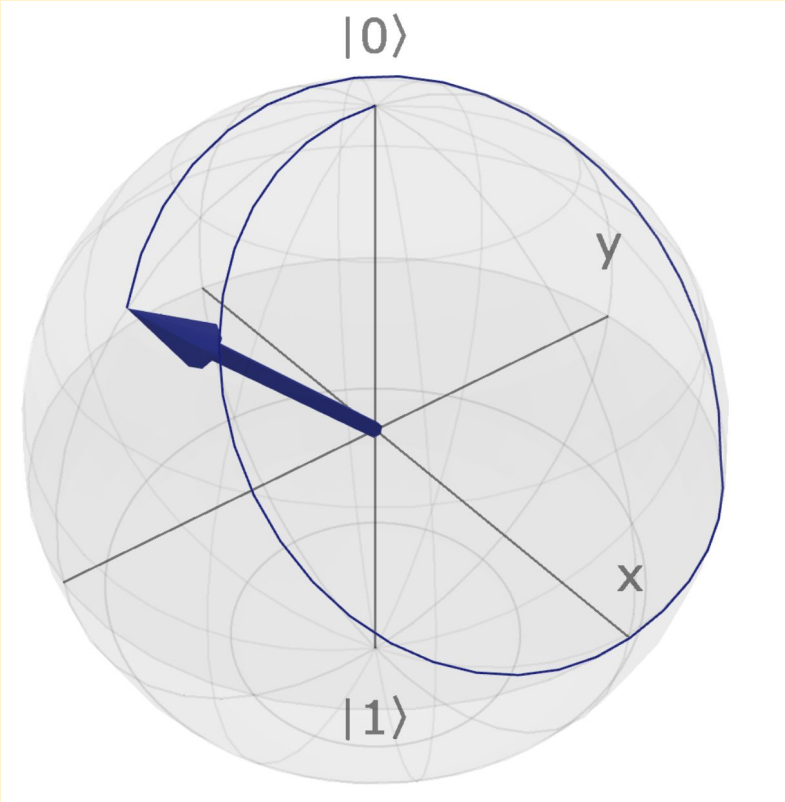

HTHSTHSTH – Curious!

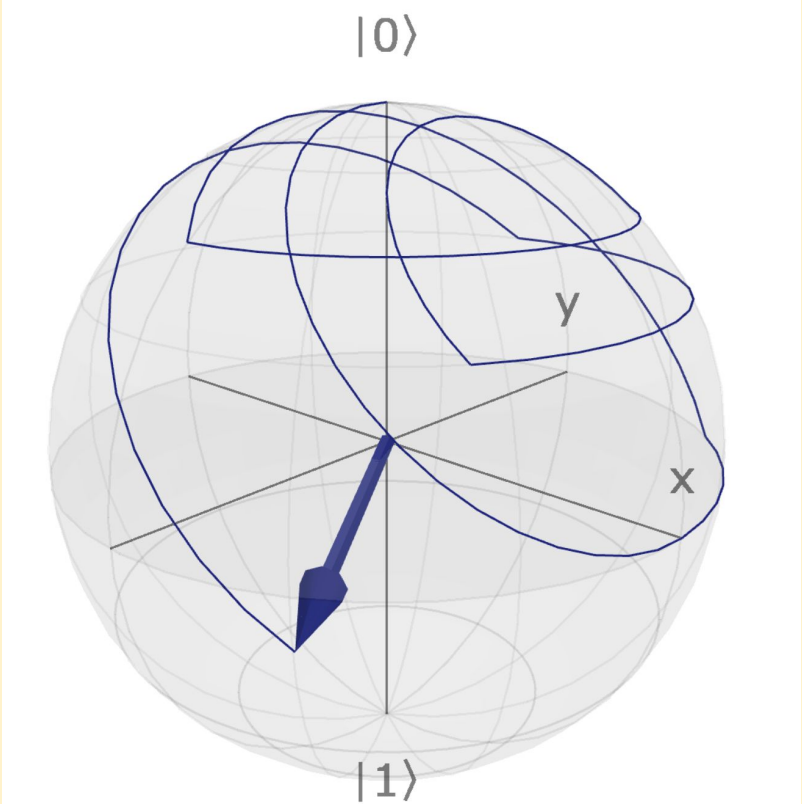

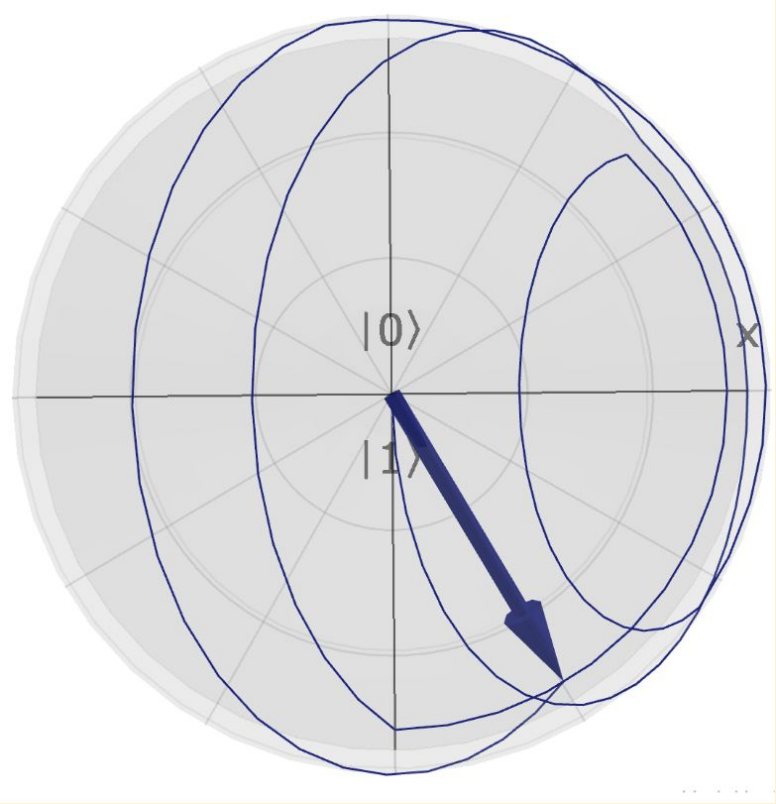

Optimized Sequence Algorithm

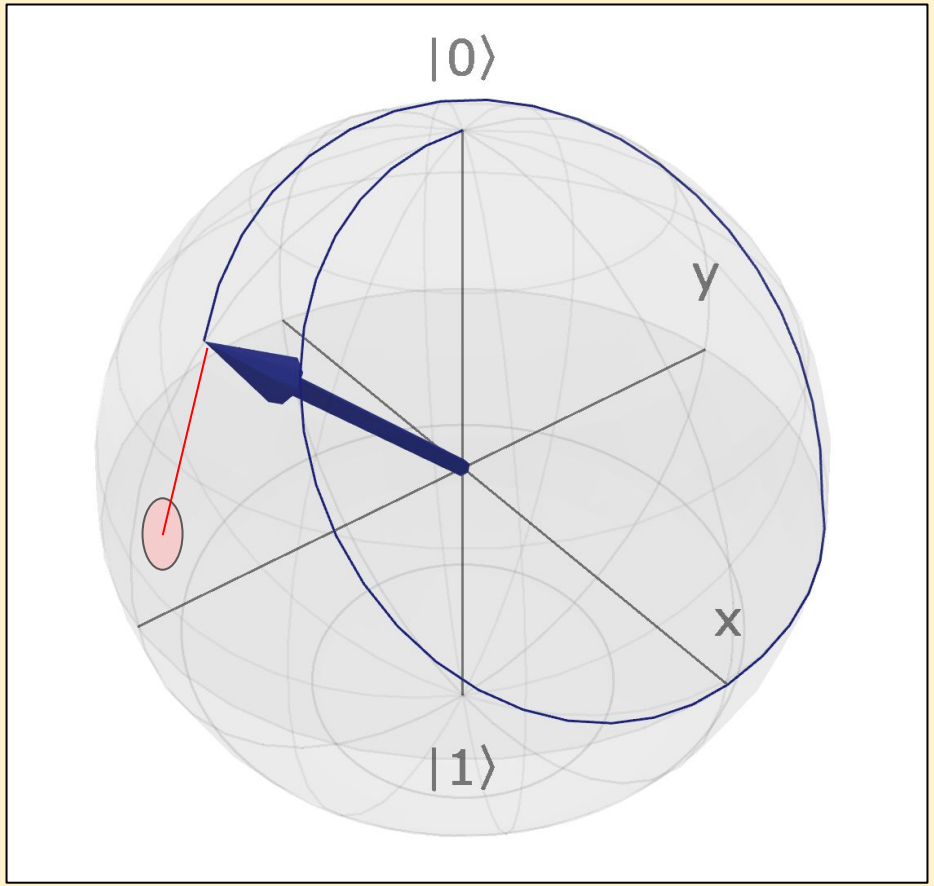

Optimized Sequence Algorithm

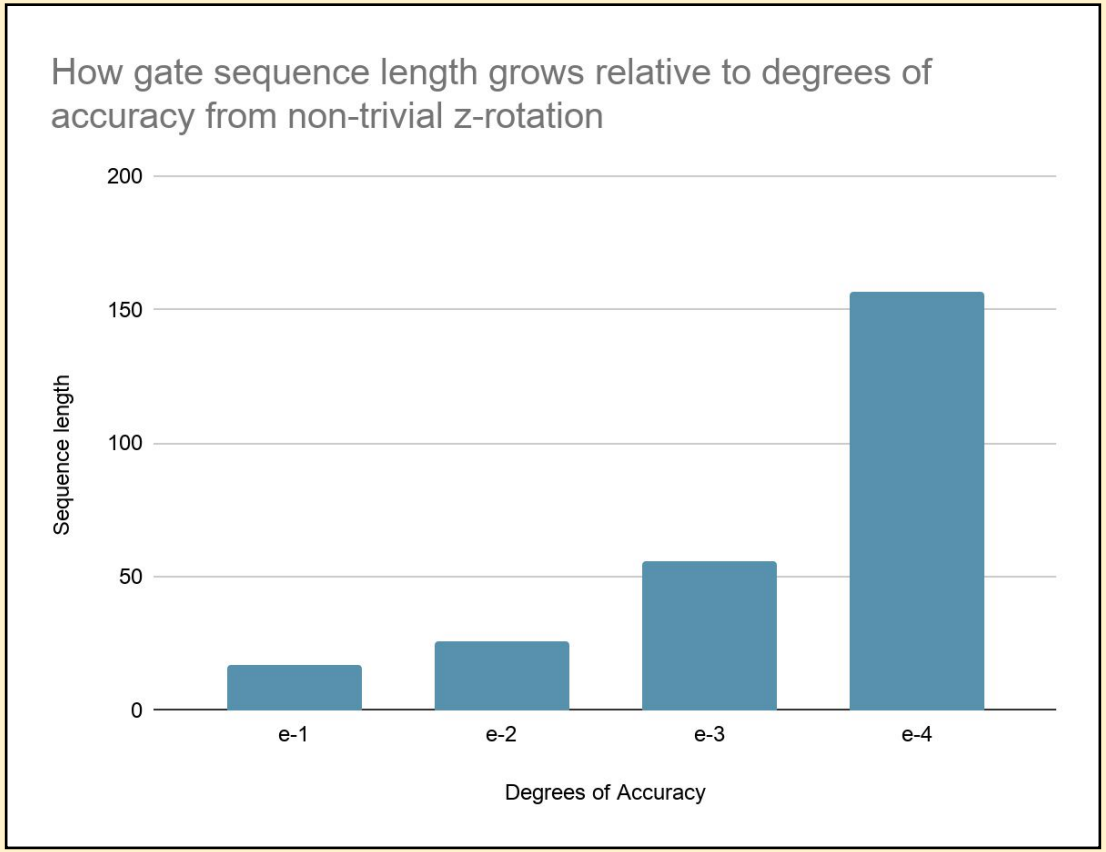

e-1

S H T H T H S S S H T H T H S S T

e-2

S H T H T H S S S T H T S H T H S T S H T H T S S T

e-3

S H S H T H T S H T H T S H S H T H S T H T H T H S S T H T H T S H S T H T H T H S S S T H T S S T H T H S H S

e-4

S H T H T H S S S H T H T H S S T S H T H T S H T H S T S H S H T H T S S T H T H T H S H T H S T S H T H T S H S H T H S H T H S H S T
H T H S T S H T H S T H T H T H S H T H T H T H S T S H T H S H T H S T H S T H S H S T S S H T H T H S S T H T H S H S T S H T H S S T
S H S H T H T S S T H T H T H S T H T H S

Non-Clifford Gates are Expensive

- What if we *couldn't* use the T gate?

Imagine your main is in some state: $|\psi\rangle = \alpha|0\rangle + \beta|1\rangle$

And your ancilla qubit is in the |0> state.

If you *were* able to apply the T gate onto your state, you'd get the state $\alpha|0\rangle + e^{i\pi/4}\beta|1\rangle$

But, we can't.

Setting up the teleportation

To the ancilla bit (which starts in |0>), apply the Hadamard gate, then the T gate to put it into the state $1/\sqrt{2}(|0\rangle + \beta e^{i\pi/4}|1\rangle)$ (This is the |T>) From here, apply the CNOT gate, where the main qubit is the control and the ancilla is the target, which forms the following state

$$|\psi\rangle \otimes |T\rangle = 1/\sqrt{2}(\alpha|0\rangle|0\rangle + \alpha e^{i\pi/4}|0\rangle|1\rangle + \beta|1\rangle|0\rangle + \beta e^{i\pi/4}|1\rangle|1\rangle).$$

Great! Seems easy enough, now we have the T gate on the main qubit without having to apply it to the main qubit!

Despair

But… there’s something missing. A cool wind blows through the hall, crows hawk in the background.

Hamlet’s face goes pale, Qoratio shivers.

The T gate… is not high fidelity.

The indomitable human spirit

Well, we aren’t ones to give up. To get a high-fidelity T gate, there is a solution that requires a “distillation” process, where 15 qubits are used in a subroutine in order to form a high fidelity T gate. This extra setup is *crucial in adding up cost of the T gate.*

Teleportation

So, back to the teleportation.

After the CNOT has been applied, we can do a Z-basis measurement, in which I get a bit *m*, and feed-forward that bit in order to either

a) (m=1) Apply an S gate at the end to convert from T dagger to T
b) (m=1) Do nothing

Teleportation (2)

Don't just take my word for it. Let's see why it works. From the .ipynb, we can follow the exact behavior after the CNOT to confirm the teleportation works as intended.

Well, if we go from the CNOT state that I had placed above, $1/\sqrt{2}(\alpha\,|0\rangle\,|0\rangle + \alpha e^{i\pi/4}\,|0\rangle\,|1\rangle + \beta\,|1\rangle\,|0\rangle + \beta e^{i\pi/4}\,|1\rangle\,|1\rangle)$, if m, the second value, is 0, then you keep the $\alpha\,|0\rangle + \beta e^{i\pi/4}\,|1\rangle$, as those are the two that had the second qubit as 0. This forms $\alpha\,|0\rangle + \beta e^{i\pi/4}\,|1\rangle$, which is equivalent to applying T onto the original $|\psi\rangle$. If the measurement result was $m = 1$, we'd need to take the states where the second qubit is 1, meaning $\alpha e^{i\pi/4}\,|0\rangle + \beta\,|1\rangle$, which is equivalent to applying $T^\dagger$ onto the original $|\psi\rangle$

This, therefore, incurs a cost onto the sequences we form from the previous section (that we got from A*). For every T, we need to apply a Hadamard, a T gate, a CNOT, and a feed forward. Moreovoer, the measurement bit that decides application m will be $m=1$, i.e not correct and requiring one extra S gate to go back to T ($S T^\dagger$ = T), 50% of the time! This extra S gates will accumulate!

Physical to logical

- To get started on the logical mapping, let's start off with some basic ideas
- Seane code encodes 7 physical qubits -> 1 logical qubit.
- These 7 physical qubits serve the following purposes
  - 3 qubits for phase flip error
  - 3 qubits for bit flip error
  - 1 qubit for holding the actual information

If we construct this with a kernel in squin, it'll look like

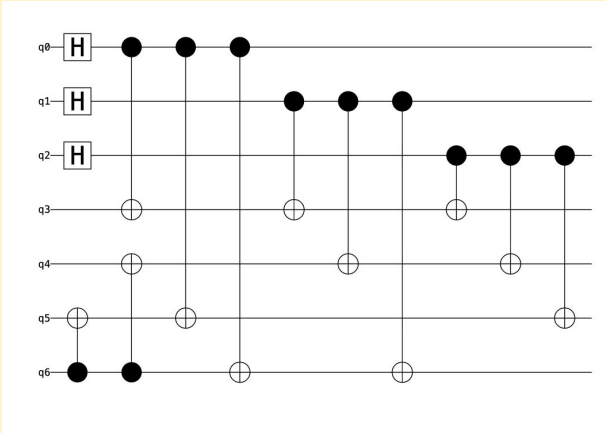

Transversality

- A key part of *why* the T gate is so expensive has to do with Transversality.
  - How can I apply the logical version of this gate?
- For the Clifford set, applying the logical version of the gate is nothing more than just applying the physical gates to all the physical qubits.
- For T, however, *WE* need to form the actual logical T gate.

But how? Man, if only there was a paper by QuEra that showed how to make an arbitrary logical state!

Arbitrary states

- We want to take the mapping that is provided by the circuit and apply it to get our logical T state.

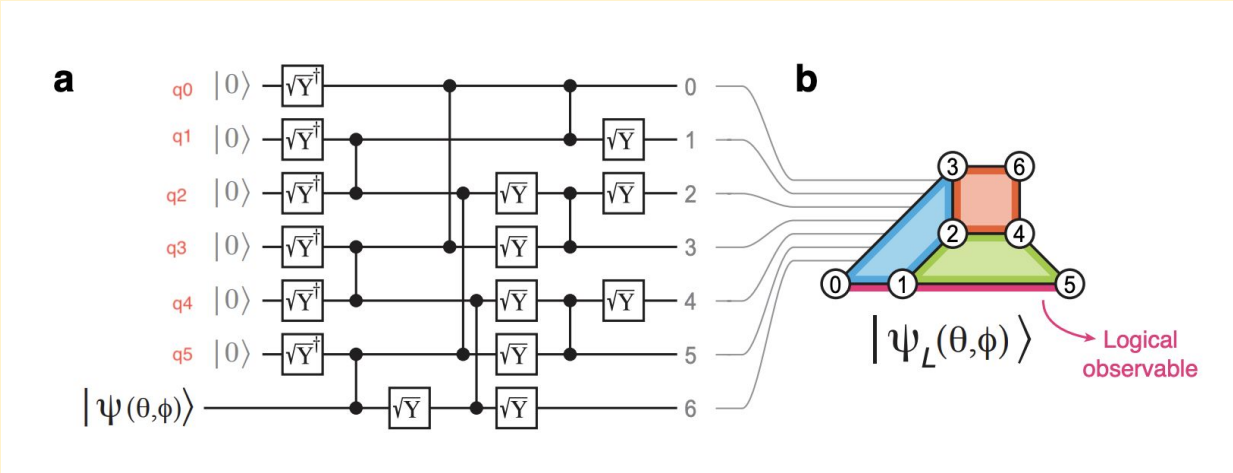

Experimental demonstration of logical magic state distillation" paper by QuEra, specifically figure 2A for forming an arbitrary state.

Arbitrary states

Notably, on the bottom, the arbitrary physical state is passed in. For us, this is the |T> state, which is formed as T matrix acting on |+>

Notably, the paper uses sqrt(Y) and sqrt(Y) dagger due to hardware efficiency. Our best bet is to try and map this to our set of H,S, CNOT in order to form a logical T state. Following this idea, this means that for every T that shows up in our process that we want to teleport to the logical state (for fault-tolerance), we need to reform this entire setup, make the logical T state from the physical T state, then teleport to the logical state, then continue onwards.

With this in mind, we can define a subroutine that uses 6 ancilla qubits, with 1 qubit at the end representing the logical |T> state

Mapping the paper to a circuit

After forming the logical T, it can get teleported similarly to part 3, where it gets observed in the Z-basis, and we feed forward the signal from the measurement, same as before. Then, based on the measurement, do a transversal S.

Notice that forming the T gate (at the beginning of the logical T), requires an entire 15-qubit distillation process (as I mentioned in part 3), AND this extra encoding to make it the logical T gate, meaning that applying a T gate in a fault-tolerant way is a very expensive operation, despite just being 1 qubit.

Compare that to a CNOT, a two qubit gate, which doesn't exhibit these pitfalls. So, indeed, Hamlet and Qoratio, 1 qubit *can* be harder to implement than a 2 qubit gate.

Mapping the paper to a circuit

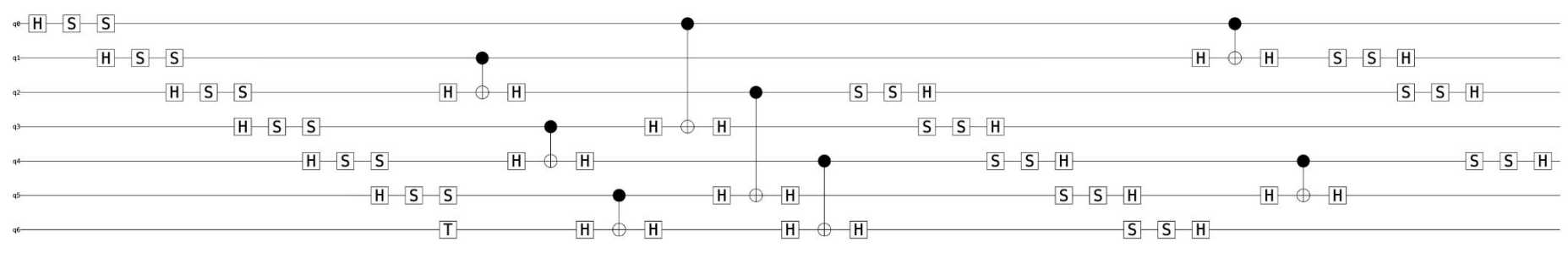

Surface Codes – Make it Topological!

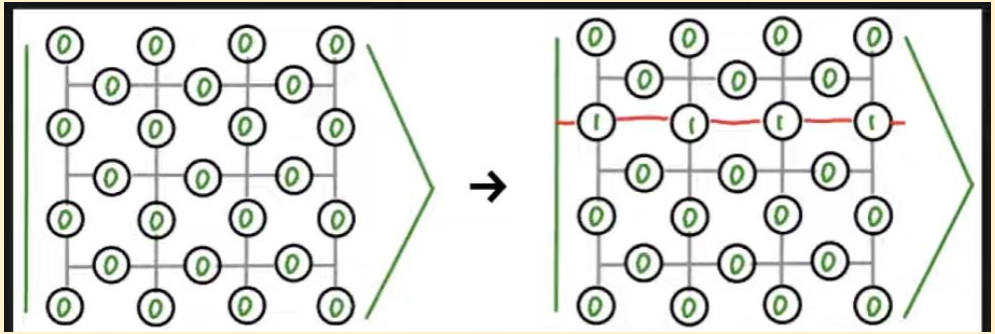

0 and 1 logical qubits.

When you represent logical qubits as physical, you want to avoid propagating error.

Surface codes a logical embedding into the circuit that aims to preserve its state without directly measuring the qubits.

Plaquette Representation

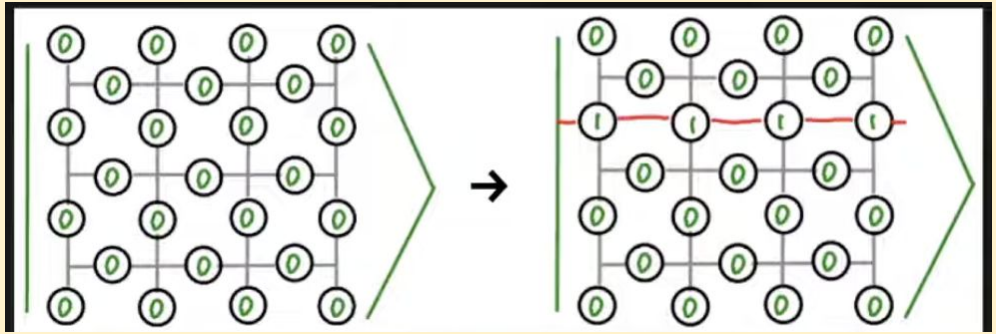

Each plaquette represents one stabilizer check on nearby data qubits.

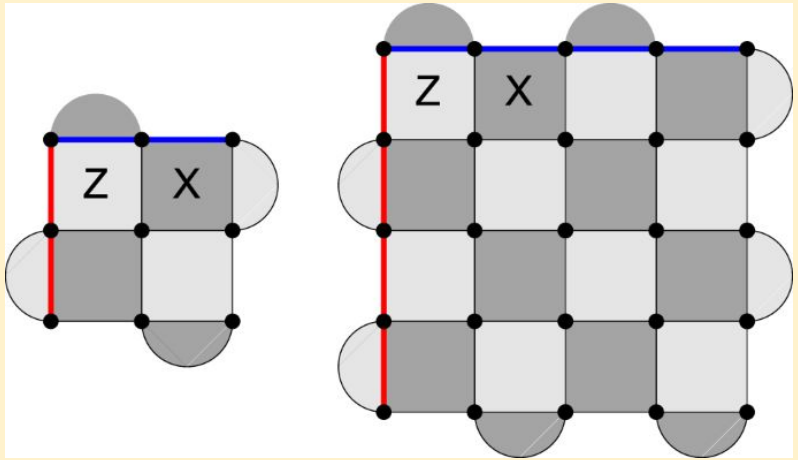

Example: 1 Logical Qubit → 9 Physical Qubits

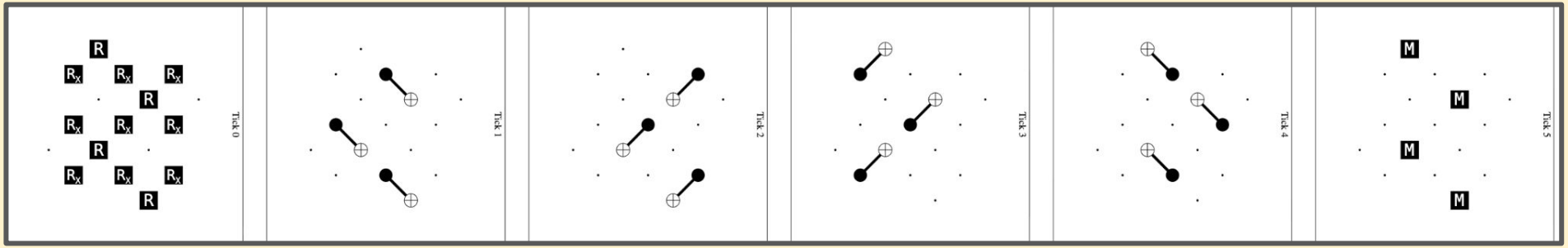

These 4 represent the X operation onto an auxiliary qubit - representing a plaquette between 4 qubits.

Each square represents a single operation performed on a logical qubit in terms of its physical qubits.

Rinse and Repeat

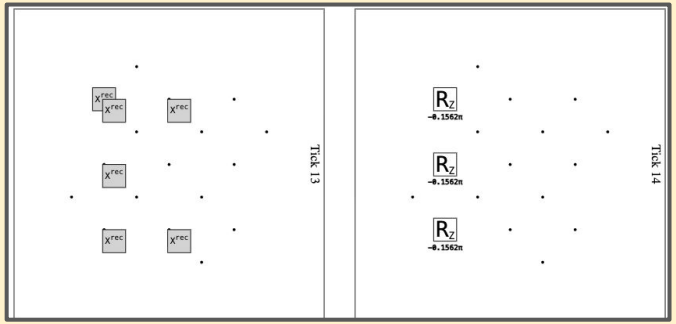

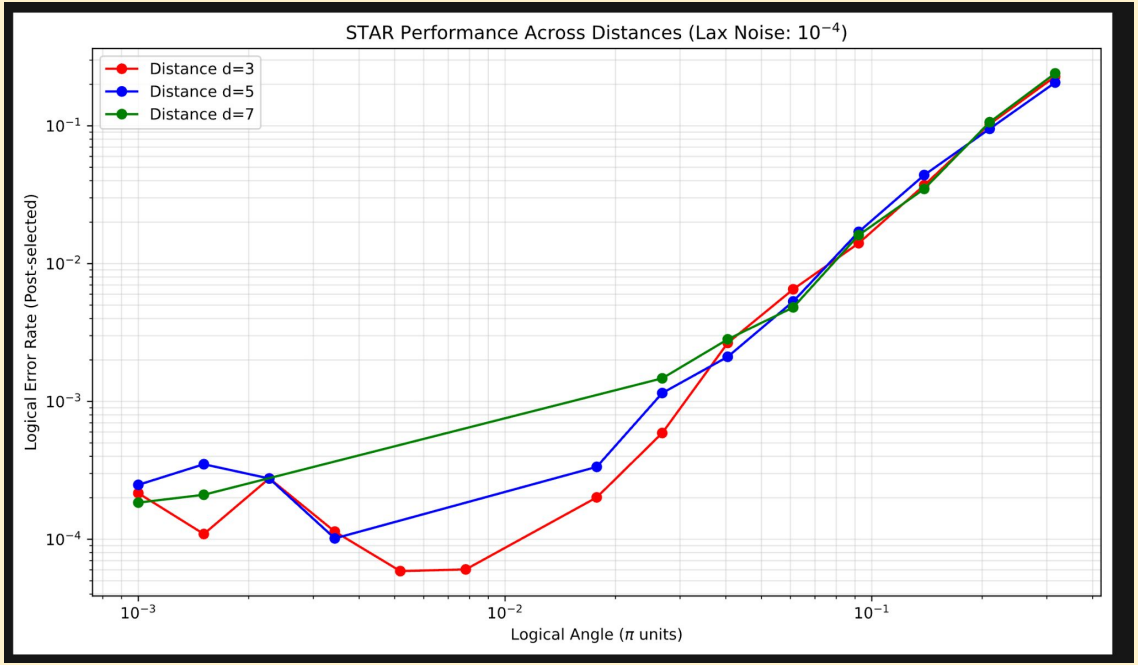

Thank you!